CD - 5500

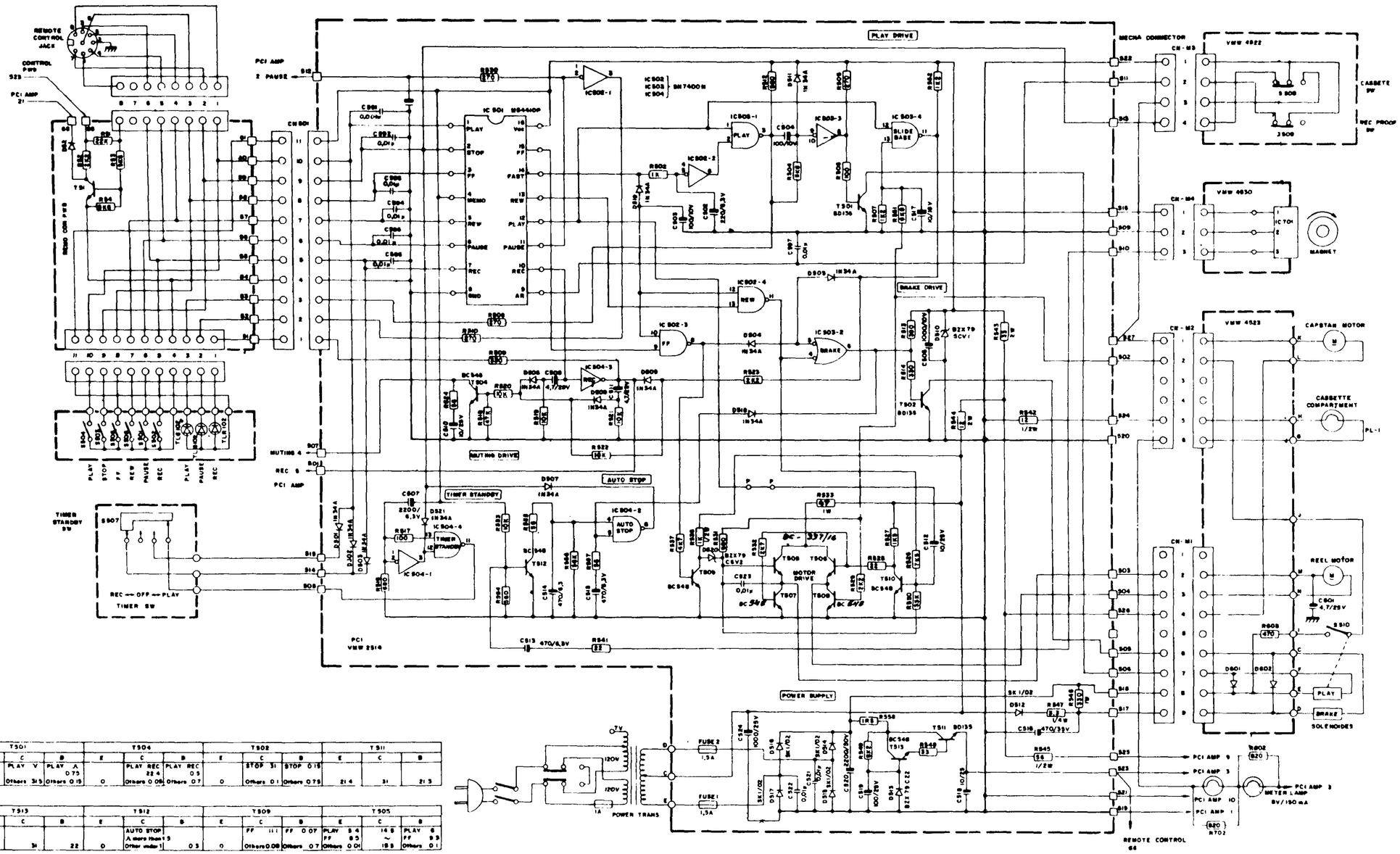

TS01			TS04			TS02			TS11		
E	C	B	E	C	B	E	C	B	E	C	B
0	PLAY V Others 3.5	PLAY A 0.75 Others 0.15	0	PLAY REC 22.4 Others 0.06	PLAY REC 0.5 Others 0.7	0	STOP 3.1 Others 0.1	STOP 0.15 Others 0.75	21.4	3.1	21.3

TS13			TS12			TS09			TS05		
E	C	B	E	C	B	E	C	B	E	C	B
21.4	3.4	22	0	AUTO STOP A more than 1.5 Other under 1	0.3	0	FF 11.1 Others 0.08	FF 0.07 Others 0.7	PLAY 3.4 FF 8.5 Others 0.01	14.5 ~ 18.5	PLAY 6 FF 9.5 Others 0.1

TS07			TS06			TS08			TS10		
E	C	B	E	C	B	E	C	B	E	C	B
0	PLAY 5.4 FF 8.7 Others 0.01	REW 0.75 Others 0.07	REW 9.2 Others 0.07	14.15 ~ 18.5	REW 9.1 Others 0.07	0	REW 9.1 Others 0.07	PLAY FF 0.75 Others 0.1	0	REW 8.5 Others 0.07	REW 0.07 Others 0.7

	1	2	3	4	5	6	7	8	9	10	11	12	13	14	15	16
IC 501	At PLAY operation 0 Others 5	At STOP operation 0 Others 5	At FF operation 0 Others 5	5	At REW operation 0 Others 5	At PAUSE operation 0 Others 5	At REC operation 0 Others 5	0	Playback cassette 0 Recording cassette 0	REC 5 Others 0.1	PAUSE 5 Others 0.1	PLAY 5 Others 0.1	REW 5 Others 0.1	FF and REW 3.9 Others 0.1	PLAY Others	8
IC 502	PAUSE 5 Others 0.15		PAUSE 0.15 Others 4.5	FF REW 5 Others 1		FF REW 0.07 Others 3.9	0	FF 0.07 Others 3.9	FF 5 Others 0.15	FF REW 1.7 Others 0.25	REW 0.07 Others 3.8	REW 1.8 Others 0.25	REW 5 Others 0.15	5		
IC 503	PLAY 5 Others 0.1	FF and REW 0 Others 4	PLAY 0.2 Others 5	REW 0 Others 3.8	PLAY and FF 0.4 Others 1.7	PLAY FF REW 3.5 Others 0.15	0	PLAY 4.3 Others 0.1	PLAY 1.5 Others 5		PLAY 0.1 Others 5	PLAY 2.1 Others 0.2	PLAY 5 Others 0.1	5		
IC 504	0.9	0.9	5.4	AUTO STOP 1.8 Others 0.9	AUTO STOP 1.4 Others 0.8	AUTO STOP V Others 5	0	REC 0.1 Others 5	REC 5 Others 0.11		5	5.4	1.0	5		

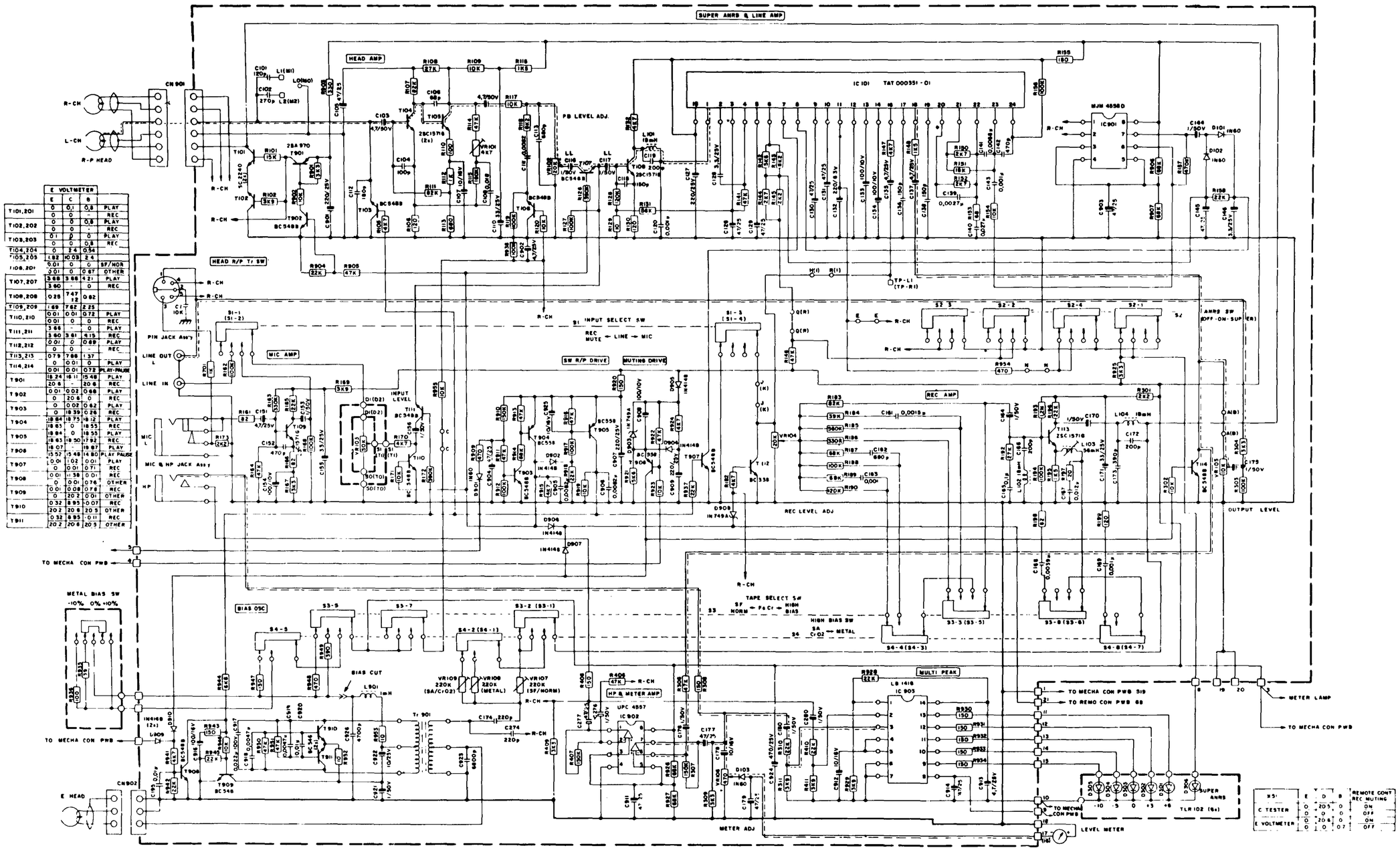

	E	C	B	VOLTMETER
T101,201	0	0.1	0.8	PLAY
T102,202	0	0	–	REC
T103,203	0	0	0.8	PLAY
	0	0	0.8	REC
T104,204	0	2.4	0.54	
T105,205	1.82	10.03	2.4	
T106,201	0.01	0	0	SP/NOR
	3.01	0	0.67	OTHER
T107,207	3.68	3.66	4.21	PLAY
	3.60	–	0	REC
T108,208	0.25	7.47 ±2	0.82	
T109,209	1.69	7.62	2.25	
T110,210	0.01	0.01	0.72	PLAY
	0.01	0	0	REC
T111,211	3.66	–	0	PLAY
	3.60	3.61	4.15	REC
T112,212	0.01	0	0.69	PLAY
	0	0	–	REC
T113,213	0.79	7.86	1.37	
T114,214	0	0.01	0	PLAY
	0.01	0.01	0.72	PLAY-PAUSE
T901	18.24	18.11	15.48	PLAY
	20.6	–	20.6	REC
T902	0.01	0.02	0.66	PLAY
	0	20.6	0	REC
T903	0	0.02	0.62	PLAY
	0	18.39	0.26	REC
T904	18.84	18.75	18.12	PLAY
	18.83	0	18.53	REC
T905	18.84	0	18.53	PLAY
	18.83	18.50	17.92	REC
T906	18.07	–	19.87	PLAY
	15.52	5.48	14.80	PLAY PAUSE
T907	0.01	1.02	0.01	PLAY
	0	0.01	0.71	REC
T908	0.01	11.38	0.01	REC
	0	0.01	0.76	OTHER
T909	0.01	0.08	0.76	REC
	0	20.2	0.01	OTHER
T910	0.32	8.95	0.07	REC
	20.2	20.6	20.3	OTHER
T911	0.32	8.95	0.11	REC
	20.2	20.6	20.3	OTHER

	E	D	B	REMOTE CONT REC MUTING
C TESTER	0	20.5	0	ON
	0	0	0	OFF
E VOLTMETER	0	20.6	0	ON
	0	0	0.7	OFF